S-30

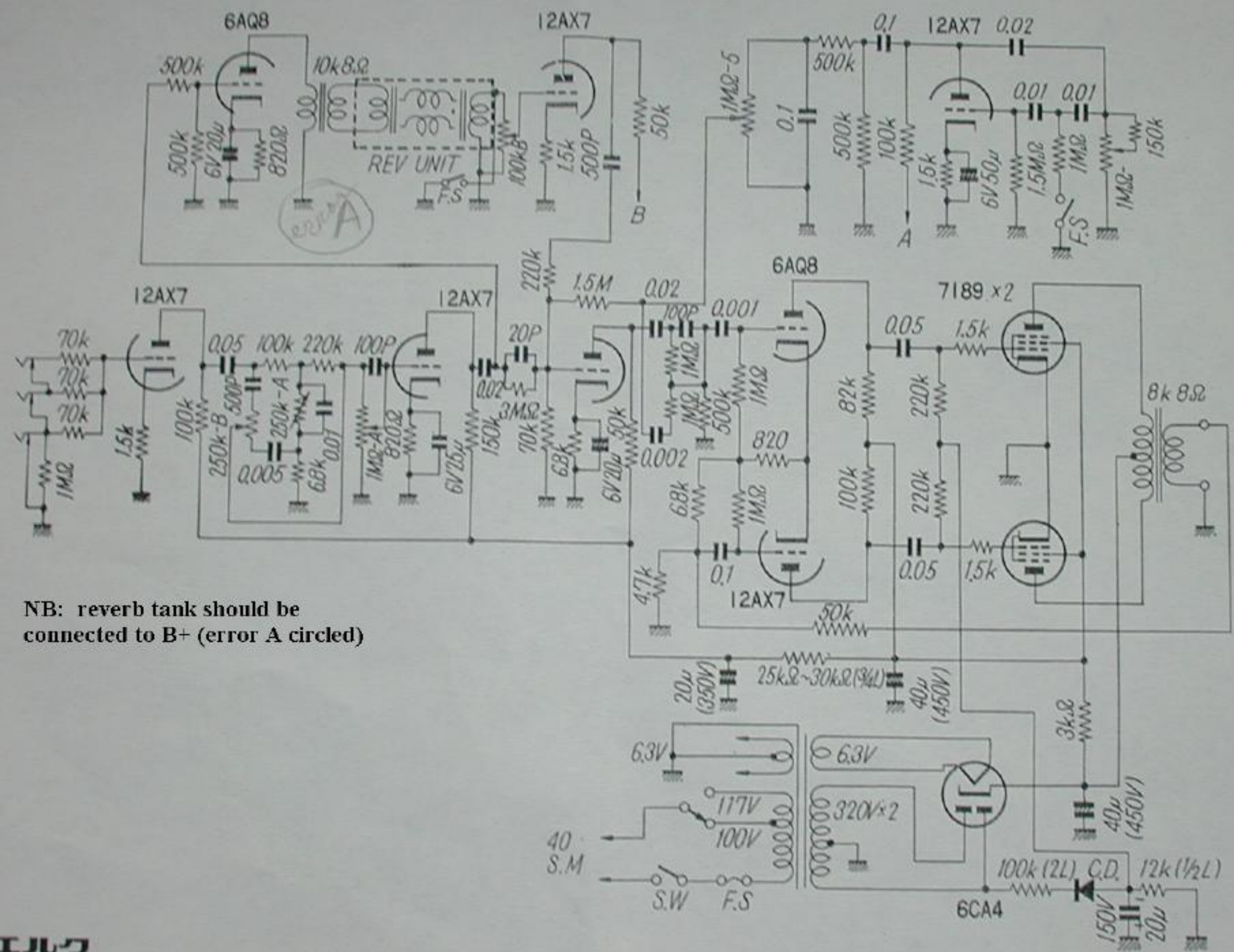

NB: reverb tank should be connected to B+ (error A circled)