FENDER MODEL "DELUXE REVERB-AMP AA763" SCHEMATIC

THIS PRODUCT MANUFACTURED UNDER ONE OR MORE OF THE FOLLOWING U.S. PATENTS-
CIRCUIT PATENT #2817708, #2973681
DESIGN PATENT #192859

J-FC

NOTICE

1. - VOLTAGES READ TO GROUND WITH ELECTRONIC VOLTMETER. VALUES SHOWN + OR - 20%
2. - ALL RESISTORS ½ WATT 10% TOLERANCE IF NOT SPECIFIED.
3. - ALL CAPACITORS AT LEAST 400 VOLT RATING IF NOT SPECIFIED.

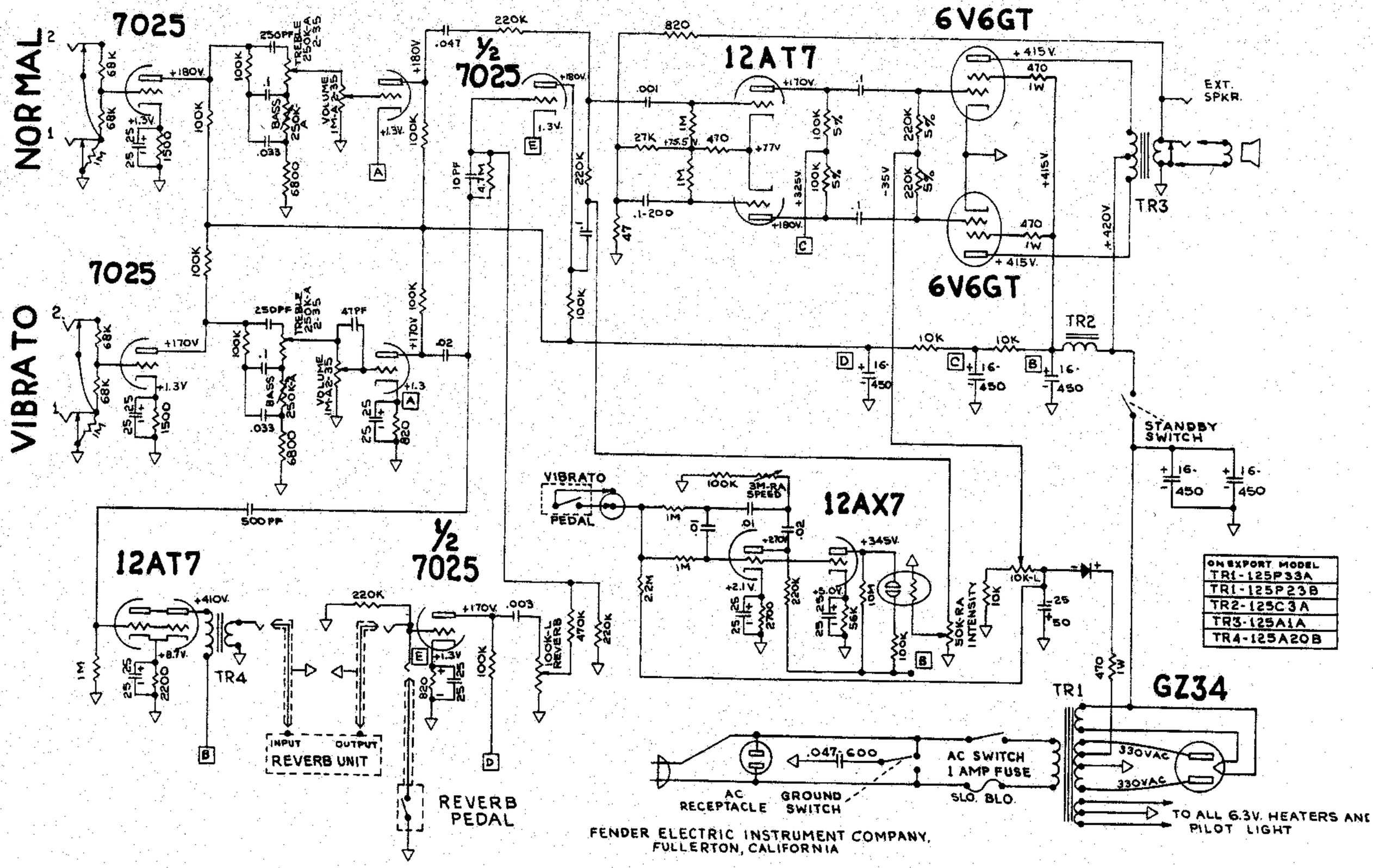

FENDER ELECTRIC INSTRUMENT COMPANY,
FULLERTON, CALIFORNIA