FENDER "CONCERT" SCHEMATIC
MODEL 6G12

A-FJ

NOTICE

1 - VOLTAGES READ TO GROUND WITH ELECTRONIC VOLTMETER. VALUES SHOWN + OR -

2 - ALL RESISTORS 1/2 WATT IF NOT SPECIFIED
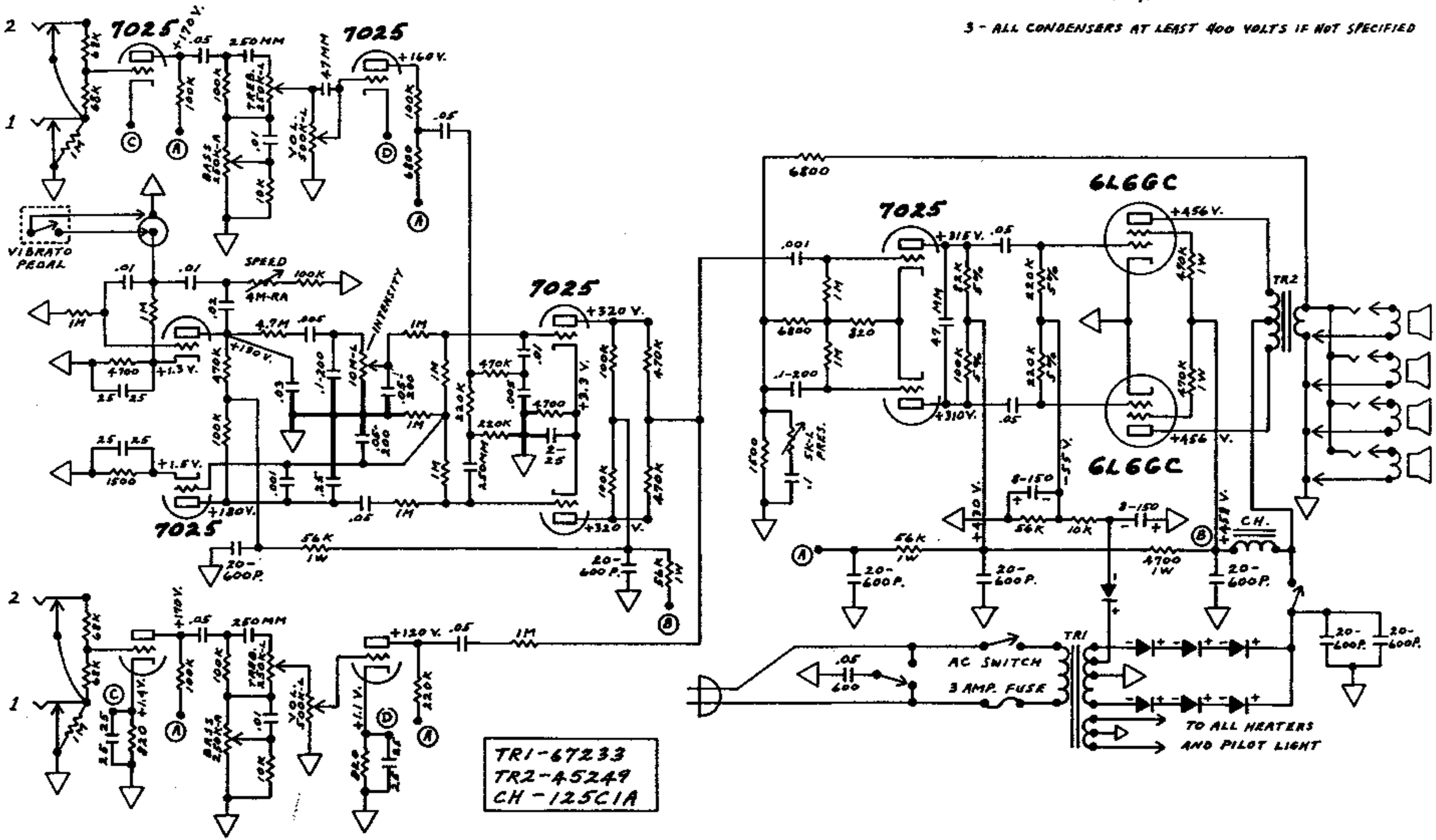
3 - ALL CONDENSERS AT LEAST 400 VOLTS IF NOT SPECIFIED