FENDER MODEL "BANDMASTER-AMP AB763" SCHEMATIC P/B NOTICE

THIS PRODUCT MANUFACTURED UNDER ONE OR MORE OF THE FOLLOWING U.S. PATENTS - #2817708, #2973681, 192859 / PATENTS PENDING

C-FD

1.- VOLTAGES READ TO GROUND WITH ELECTRONIC VOLTMETER VALUES SHOWN + OR - 20%.
2.- ALL RESISTORS 1/2 WATT, 10% TOLERANCE IF NOT SPECIFIED.
3.- ALL CAPACITORS AT LEAST 400 VOLT RATING IF NOT SPECIFIED.

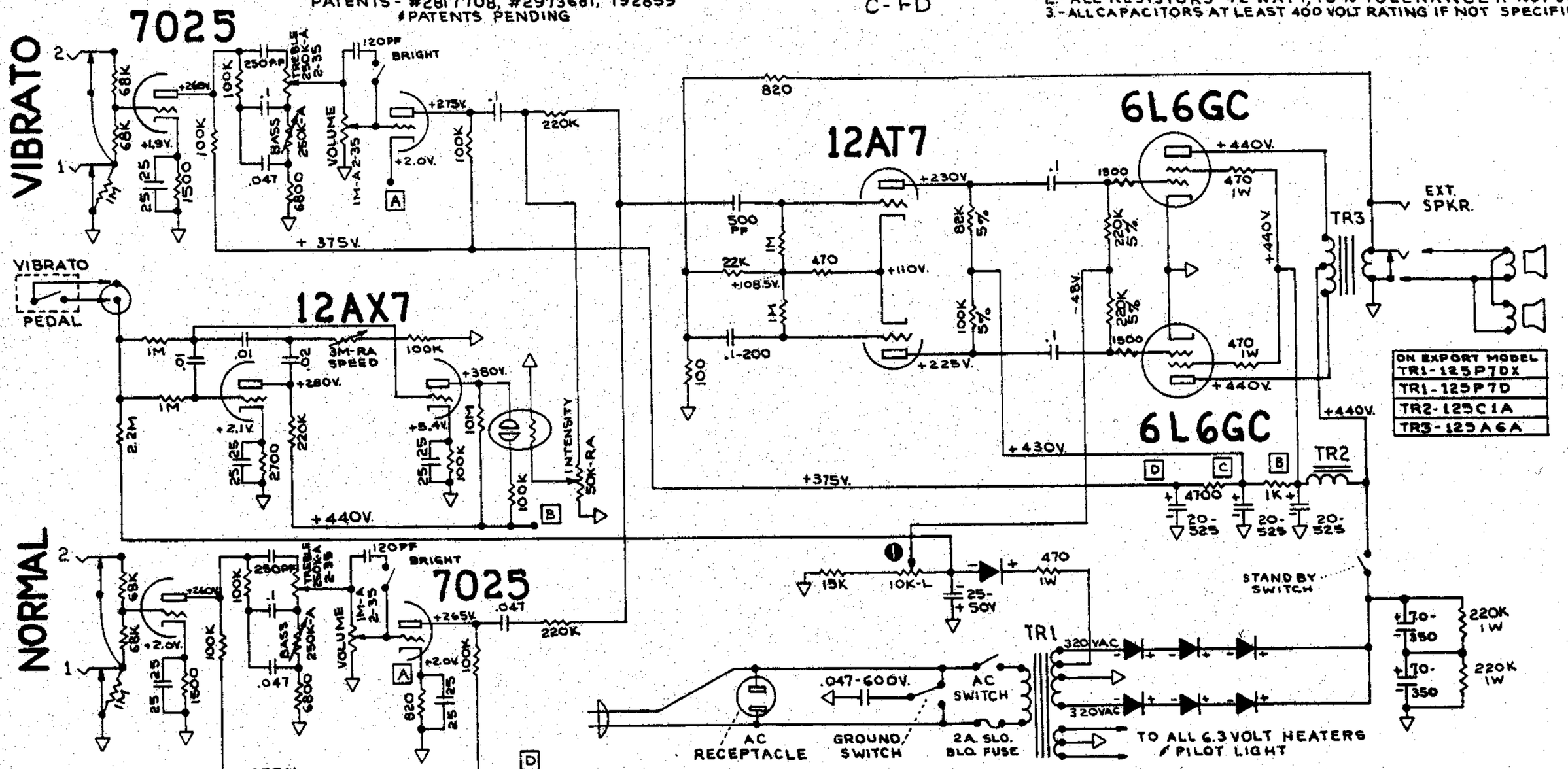

FENDER ELECTRIC INSTRUMENT COMPANY
FULLERTON, CALIFORNIA